Ginlong Technologies Co., Ltd.
No. 57 Jintong Road, Binhai Industrial Park, Xiangshan, Ningbo,
Zhejiang, 315712, P.R.China.
Tel: +86 (0)574 6578 1806
Fax: +86 (0)574 6578 1606
Email:info@ginlong.com
Web:www.ginlong.com

Please adhere to the actual products in case of any discrepancies in this user manual.

If you encounter any problem on the EPM, please find out the EPM S/N and contact us, we will try to respond to your question ASAP.

Solis 5G PLUS Export Power Manager

Installation and Operation Manual

Ver 1.6

Ginlong Technologies Co., Ltd.

Contents

1. Introduction 2
   1.1 Product Description 2
   1.2 Packaging 3
2. Safety Instructions 4
   2.1 Safety Symbols 4
   2.2 General Safety Instructions 4
   2.3 Notice For Use 5
3. Overview 6
   3.1 Front Panel Display 6
   3.2 LED Status Indicator Lights 6
   3.3 Keypad 6
   3.4 LCD 6
4. Installation 7
   4.1 Select Location for the Inverter 7
   4.2 Mounting the EPM 7
   4.3 Electrical Connections 9
5. Commission and decommission 15
   5.1 Commission 15
   5.2 Decommission 15
6. Operation 16
   6.1 Main Menu 16
   6.2 Information 16
   6.3 Settings 18
   6.4 Advanced Info. 19
   6.5 Advanced Settings 21
   6.6 Inverter Set 26
7. Troubleshooting 27
8. Specifications 28
8. Appendix 29

1.1 Product Description

Solis Export Power Manager can monitor and control the backflow power from the inverter to the grid thus providing export power control of inverters.
It also has integrated datalogging function as well.
The export power manager is suitable for using with all solar PV grid tie inverters.
Model: Solis-EPM3-5G-PLUS is for three phase systems.

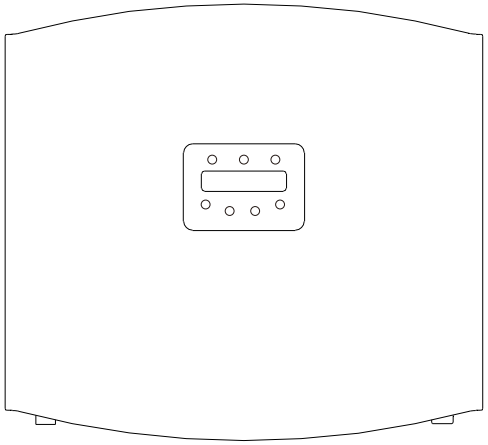

Figure 1.1 Front view

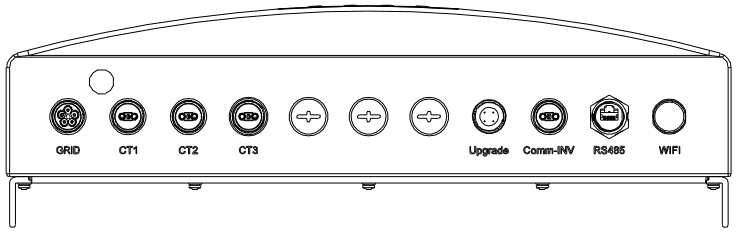

Figure 1.2 Bottom view

1. Introduction

1.2 Packaging

When you receive the EPM please ensure that all the parts listed below are included:

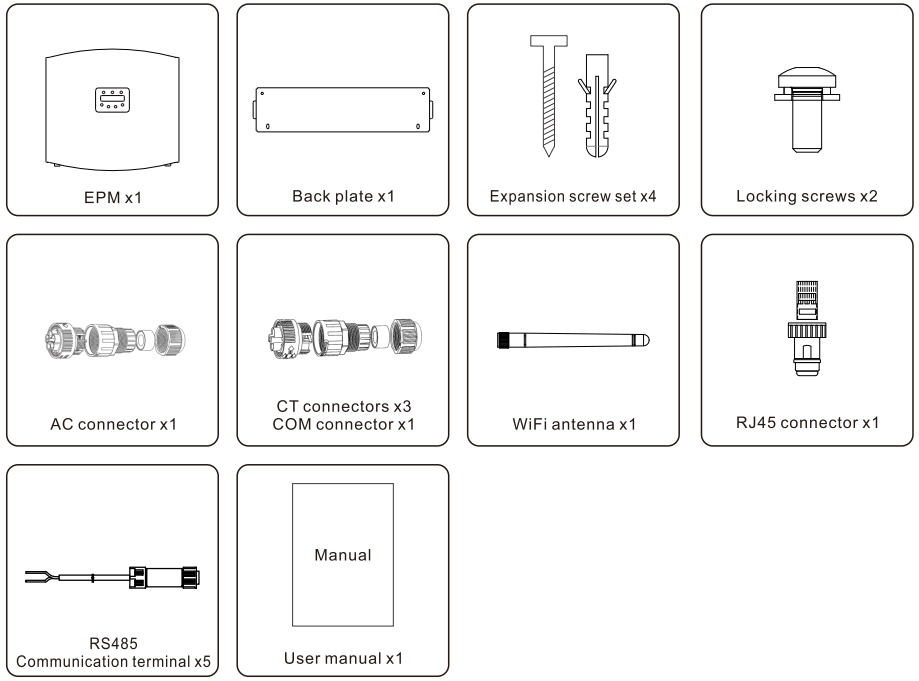

If anything is missing, please contact your local Solis distributor.

2.1 Safety Symbols

Safety symbols used in this manual, which highlight potential safety risks and important safety information, are listed as follows:

WARNING:
WARNING symbol indicates important safety instructions, which if not correctly followed, could result in serious injury or death.

NOTE:
NOTE symbol indicates important safety instructions, which if not correctly followed, could result in some damage or the destruction of the inverter.

CAUTION:
CAUTION, RISK OF ELECTRIC SHOCK symbol indicates important safety instructions, which if not correctly followed, could result in electric shock.

CAUTION:
CAUTION, HOT SURFACE symbol indicates safety instructions, which if not correctly followed, could result in burns.

2.2 General Safety Instructions

WARNING:
Electrical installations must be done in accordance with the local and national electrical safety standards.

WARNING:
It is forbidden to insert or unplug the CT cable with power on.
If accidentally disconnected the CT cable, please turn off the main AC switch and wait for 5 mins before reconnect the cable.

CAUTION:
Risk of electric shock. Do not remove cover. There is no user serviceable parts inside. Refer servicing to qualified and accredited service technicians.

CAUTION:
Risk of electric shock from energy stored in capacitors.
Do not remove cover until 5 minutes after disconnecting all sources of supply expect service technician. Warranty may be voided if any unauthorized removal of cover.

2. Safety Instructions

2.3 Notice For Use

The Export Power Manager has been constructed according to the applicable safety and technical guidelines.

Use the Export Device in installations that meet the following specification ONLY:

1. Permanent installation is required
2. The electrical installation must all the applicable regulations and standards.
3. The Export Power Manager must be installed according to the instructions stated in this manual.
4. The Export Power Manager must be installed according to correct technical specification.
5. To install the Export Device you should notice the phase of sampling voltage and the direction of sampling current, then you can connect sampling wires and CT (current transformer).

3. Overview

3.1 Front Panel Display

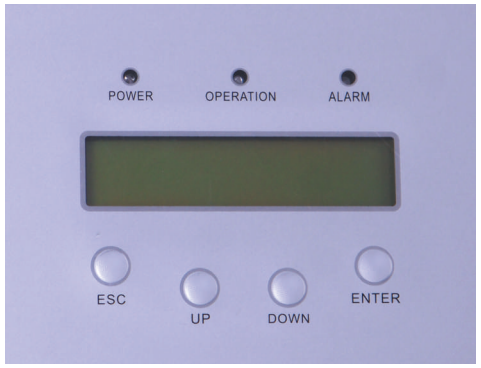

Figure 3.1 Front Panel Display

3.2 LED Status Indicator Lights

	Light	Status	Description
①	POWER	ON	Export Device power on
		OFF	Export Device power off
②	OPERATION	ON	Communication with inverter
		OFF	No communication with inverter
③	ALARM	ON	Inverter, EPM or Communication Fault
		OFF	No alarm

Table 3.1 Status Indicator Lights

3.3 Keypad

There are four keys in the front panel of the Inverter(from left to right): ESC, UP, DOWN and ENTER keys. The keypad is used for:

- Scrolling through the displayed options (the UP and DOWN keys);
- Access to modify the adjustable settings (the ESC and ENTER keys).

3.4 LCD

The two-line Liquid Crystal Display (LCD) is located on the front panel of the EPM, which shows the following information:

- Export Power Manager operation status and data;
- Service messages for operator;

4. Installation

4.1 Select a Location for the EPM

To select a location for the EPM, the following criteria should be considered:

- The temperature of the EPM could up to 75℃.
- The EPM is designed to work in extreme temperature range is from -25℃ to 60℃.
- The EPM should be kept minimum 300mm clearance from the other device.
- The EPM cannot be placed in direct sunlight.

4.2 Mounting the EPM

Please attach mounting plate on to wall horizontally where to install the product. Then mark A , B , C and D to fix mounting plate.(see Figure 4.1)

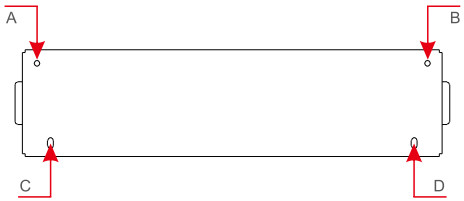

Figure 4.1 Bracket

Drill four φ8 holes and insert expandable shell into the holes which make the bracket alignment. After that fix the bracket on the wall.(see Figure 4.2)

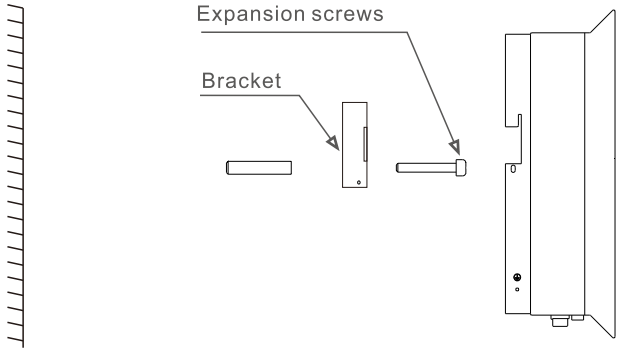

Figure 4.2 Fix the bracket on the wall

Hang the EPM in the bracket by the steps below .(see Figure 4.3)

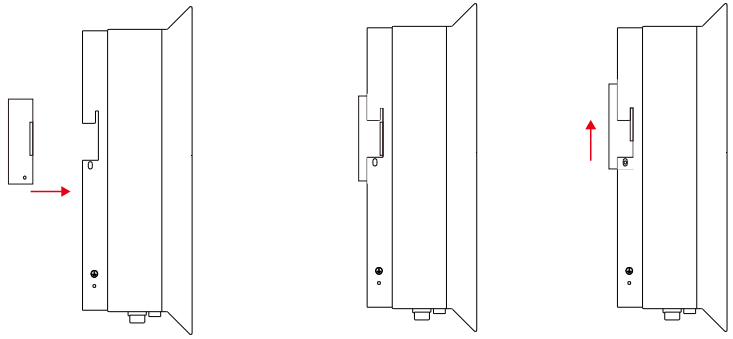

Figure 4.3 Hang the EPM in the bracket

Fix the two screw at the side of bracket.(see Figure 4.4)

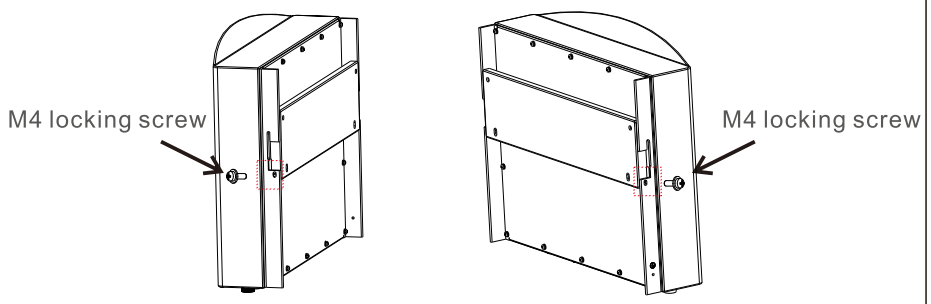

Figure 4.4 Fix the two screw

4.3 Electrical Connections

The Export Power Manager is designed for electrical connection without removing the cover.

The meaning of the symbols located at bottom of the EPM is listed in Table 4.1.

Grid_U.V.W.N	AC voltage sampling terminal
CT1	AC current sampling terminal(U)
CT2	AC current sampling terminal(V)
CT3	AC current sampling terminal(W)
Comm_INV	Connect to solis inverters
RS485	COM for upgrade
LAN	Connect to monitoring platform through wire
WIFI	WiFi antenna to monitoring platform (Wireless)

Table 4.1 The meaning of the symbols located at bottom of the EPM

System connection diagram is as follows:

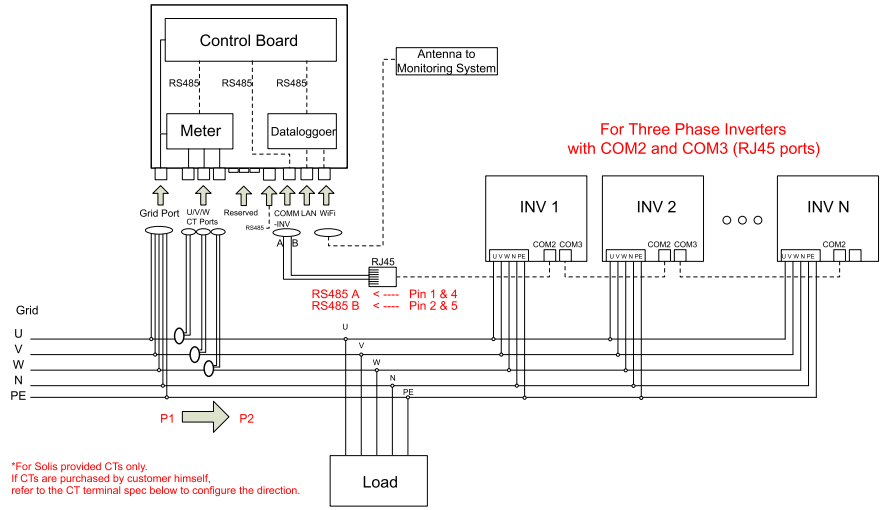

Figure 4.5 For Three Phase Inverters with COM2 and COM3 ports

4. Installation

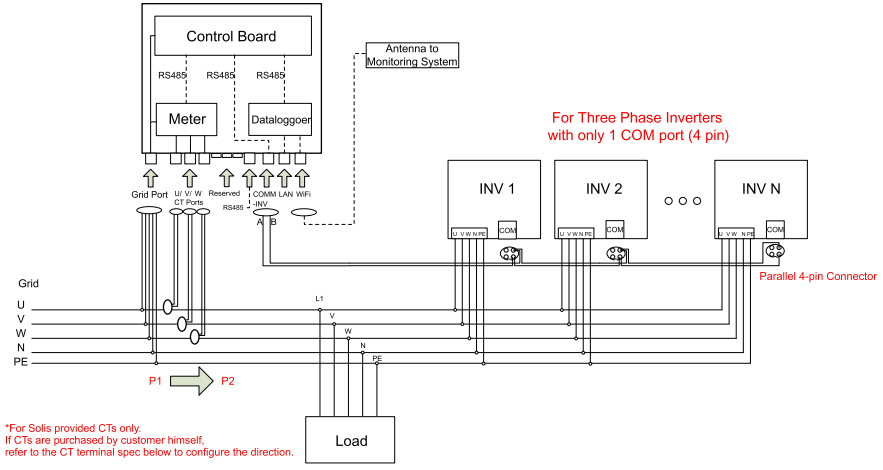

Figure 4.6 For Three Phase Inverters with only 1 COM port

1 Make the Grid input cable

a. Measure the distance from EPM to power distribution box. And find proper cable for grid input. 5 core cable for Solis-EPM3-5G-PLUS.

b. For three phase inverter installation connect U, V, W to pin1, 2,3 and connect N to pin4, connect PE to ⏚ (see figure4.7).

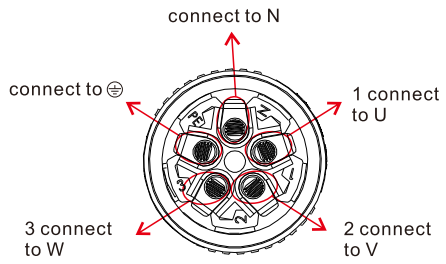

Figure 4.7 Three phase connection

c. Strip the end of cable to 3mm (see Figure 4.8)

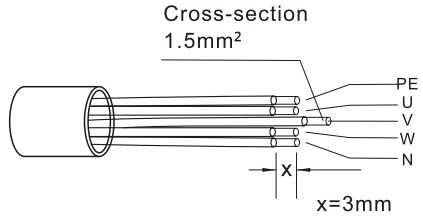

Figure 4.8 Strip the cable

d. Through the cable to the washer and use a suitable screw driver to fix the wire to the connector (see Figure 4.9).

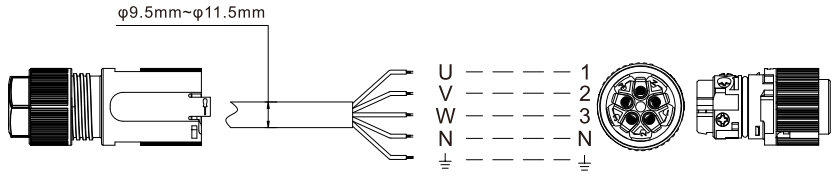

Figure 4.9 Welding wire to connector

e. Assemble the connector (see Figure 4.10)

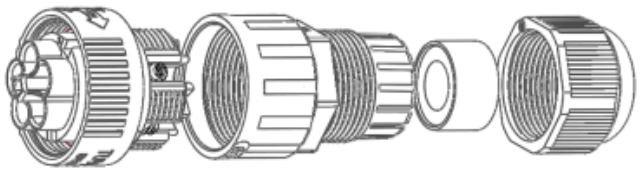

Figure 4.10 Assemble connector

2. Make RS485 cable (COMM-INV port)

a. Refer to figure 4.11, the RS485 terminals for inverter and EPM are already assembled.

Tips:RS485 cable: preferred 0.5mm.

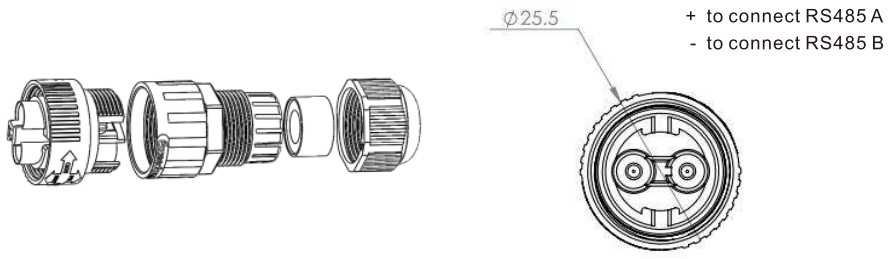

Figure 4.11 RS485 terminal

b. Refer to figure 4.11, connect communication cable between inverter with EPM, and then measure the distance from EPM to inverter. Use proper cable for RS485 connection. (0.5mm²)

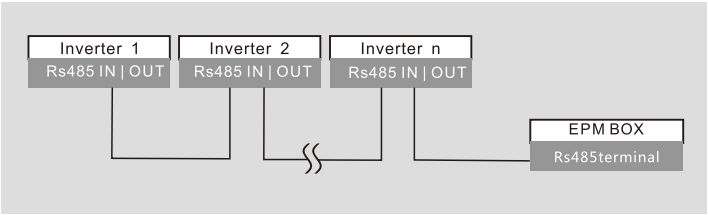

Figure 4.12 RS485 cable connection

c. Follow step1 to assemble 2 connectors to each end of cable.

3. Connect and fix the CT

To detect the backflow power, the CTs need to be installed at the PCC (Point of Common Coupling), instead of the load branch circuit.

Note:

For three phase system, CT1,CT2 and CT3 must be installed on U,V and W with correct sequence, otherwise EPM can not detect the correct data.

"The CT cable outer diameter is 6.5mm-7.5mm, cross-sectional area 1.5mm2".

4. Installation

a. Switch off the main switch, disconnect the line cables.

b. Insert the cables through the CT, make sure the P1 on CT is towards grid and P2 is towards the inverter.

c. Reconnect the line cables.

Note:

If the CT is installed in the wrong direction, the EPM can't work normally.

Note:

The standard package of EPM DOESN'T include the CT current sensor.

Please select CT with secondary current of 5A.

Specification	Dimensions(mm) W x H x D	Hole size(mm) a x e	CT Ratio	AKH-0.66K
CT-30×20-100A	90 x 114 x 40	22 x 32	100:5A	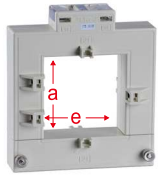
CT-60×40-300A	114 x 140 x 36	42 x 62	300:5A	
CT-80×40-600A	122 x 162 x 40	42 x 82	600:5A	
CT-80×40-1000A	122 x 162 x 40	42 x 82	1000:5A	
CT-160×80-2000A	184 x 254 x 52	82 x 162	2000:5A	
CT-160×80-3000A	184 x 254 x 52	82 x 162	3000:5A	

Table 4.2 CT Ratio

Note:

Solis recommends customers to purchase suitable current transformers from local suppliers according to the max possible current in different projects.

As long as the secondary current is 5A,it will not affect the warranty of the EPM devices and inverters.

Solis can also provide above current transformers as an optional accessory. Customers can contact Solis sales rep to place the order based on their project requirements.

4. Installation

4. Muti inverter connection

Please follow figure 4.6 system diagram to connect muti-inverters. EPM can control maximum 80 inverters. One grid connection point ONLY.

The inverter address must be set to different value. Please set address from 01 to 80. Before start up inverter please follow 6.5.1 to set inverter number in EPM.

5. Monitoring

Two methods of monitoring are available with the EPM device connected.

1. Through WiFi antenna on the EPM device.

This is similar with the Solis WiFi datalogger. The WiFi antenna can broadcast data to the local router and then to the Solis monitoring platform. No wiring is needed.

2. Through RJ45 cable

This port is used for connection directly to the router.

Note:

When connect the inverters to the EPM, do not use the other ports on inverters to realize the monitoring function.

5. Commission and decommission

5.1 Commissioning

1. Make sure the main switch is off and the system is powered off.
2. Connect all the necessary cables on EPM, such as the CT ports, COMM-INV port, Grid port and (if needed) the LAN port.
3. Connect the other end of the cables to inverter, PCC or monitoring device(if needed), respectively.
4. Turn on the main switch, go to the EPM LCD.
5. Set the inverter number, backflow power, CT parameter as described in section 6.5
6. Check if the backflow power of the system is limited to the set value.

5.2 Decommissioning

In order to aovid the backflow power to grid, please stop the inverter before stop the EPM.

1. Turn off the inverter output AC breaker or select "grid off" on each inverters' LCD.
2. Turn off inverter input DC breaker or pull out PV cable to stop inverter.
3. Turn off the grid input breaker of EPM.
4. Disconnect all cable of EPM, disassemble EPM after 5mins.

During normal operation, the display alternately shows the power of grid side and the operation Status .Screens can also be scrolled manually by pressing the UP and DOWN keys. Press the ENTER key to access to the Main Menu.

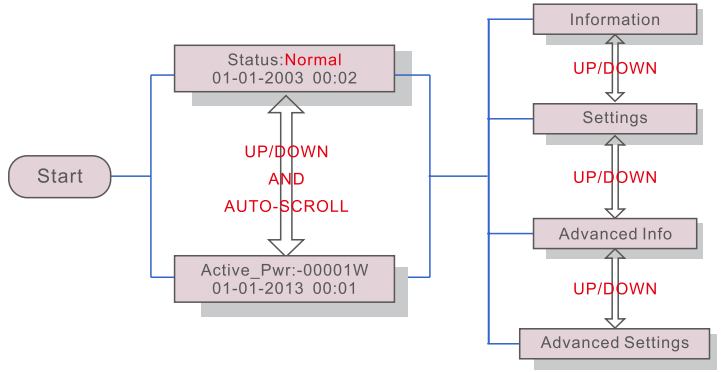

Figure 6.1 Operation Overview

There are 6 status:

Normal: The system works normally

RS485 AllFail: EPM has lost communication with ALL inverters

M-ComFailsafe: EPM has lost communication with the Meter inside

CT-Failsafe: Current Sensor failed

M-VFailsafe: One phase voltage of the meter is ZERO

RS485Fail: EPM has lost communication with one or some of the inverters

6.1 Main Menu

There are four submenus in the Main Menu (see Figure 6.1):

1. Information
2. Settings
3. Advanced Info.
4. Advanced Settings

6.2 Information

Solis Export Power Manager main menu provides access to operational data and information. The information is displayed by selecting "Information" from the menu and then by scrolling up or down.

6. Operation

Display	Description
VacA_Grid: 000.0V IacA_Grid: 000.0A	Vac_Grid: Grid voltage and current.
VacB_Grid: 000.0V IacB_Grid: 000.0A	
VacC_Grid: 000.0V IacC_Grid: 000.0A	
Load_Pwr: 0000.0KW Total_PINV: 0000.0KW	Load_Pwr: Load Power. Total_PINV: Total output power of inverters.
Export Limited: 000% Freqency: 00.00Hz	Export Limited: Inverter output power percentage. Freqency: Grid frequency.
Active_APwr: +00000W Active_BPwr: +00000W	Active_Pwr: Power of the power grid.
Active_CPwr: +00000W Active_TPwr: +00000W	Active_Pwr: Power of the power grid. Active_TPwr: :Power flows through CTs.
Inverter SN: XXXXXXXXXXXXXXX	Series number of the inverter.

Table 6.1 Information list

6.2.1 Lock screen

Pressing the ESC key returns to the Main Menu. Pressing the ENTER key locks (Figure 6.2(a)) or unlocks (Figure 6.2 (b)) the screen.

(a) (b)

Figure 6.2 Locks and Unlocks the Screen of LCD

6.3 Settings

The following submenus are displayed when the Settings menu is selected:

1.Set Time

2.Set Address

6.3.1 Set Time

This function allows time and date setting. When this function is selected, the LCD will display a screen as shown in Figure 6.3.

```
NEXT=<ENT>  OK=<ESC>
01-01-2016  16:37
```

Figure 6.3 Set Time

Press the UP/DOWN keys to set time and data. Press the ENTER key to move from one digit to the next (from left to right). Press the ESC key to save the settings and return to the previous menu.

6.3.2 Set Address

This function is used to set the address when muti inverters are connected to three monitor. The address number can be assigned from “01”to “99”(see Figure 6.4).
The default address number is “01”.

```
YES=<ENT>  NO=<ESC>
Set Address: 01
```

Figure 6.4 Set Address

Press the UP/DOWN keys to set the address. Press the ENTER key to save the settings. Press the ESC key to cancel the change and return to the previous menu.

6. Operation

6.4 Advanced Info - Technicians Only

NOTE:
To access to this area is for fully qualified and accredited technicians only.
Enter menu “Advanced Info.” and “Advanced settings” (need password).

Select “Advanced Info.” from the Main Menu.
The screen will require the password as below:

```
YES=<ENT> NO=<ESC>
Password:0010
```

Figure 6.5 Enter password

After enter the correct password the Main Menu will display a screen and be able to access to the following information.

1. Inverter Power 2. CT Connect Status 3. Version

4. Model Inverter 5. Communication Data 6. Energy Info

The screen can be scrolled manually by pressing the UP/DOWN keys.
Pressing the ENTER key gives access to a submenu.
Press the ESC key to return to the Main Menu.

6.4.1 Inverter Power

The screen shows the information of Inverter Power for each inverter which connected to the EPM.

```
->Inverter1:  00000W
  Inverter2:  00000W
```

Figure 6.6 Inverter Power

6.4.2 CT Connect Status

The position of three-phase CT installation and direction of current detection refer to 4.3, P1 on CT is towards grid and P2 is towards the inverter, then EPM detection will display OK, as shown in figure 6.7. Otherwise, the status will display "NG" which indicates wrong CT direction.

```
->CTA_ connection：OK
  CTB_ connection：OK
```

Figure 6.7 CT Connect Status

6.4.3 Version

The screen shows the model version and the software version of the Inverter.

```
Software Ver.:   11
```

Figure 6.8 Version

6.4.4 Model Inverter

The screen shows the Rated power of inverters that are connected to the EPM.

```
Model:            50000
```

Figure 6.9 Model Inverter

6.4.5 Communication Data

The screen shows the internal communication data of the Inverter, for service technicians only.

```
01-05: 00 00 00 00 00
06-10: 00 00 00 00 00
```

Figure 6.10 Communication Data

6.4.6 Energy Info

This shows the energy records on the EPM.
1.Load Total E. 2.INV Send Total E. 3.Send Grid Total E. 4.Get Grid Total E.

```
Load Total E
INV Send Total E
```

Figure 6.11 Energy Info

6. Operation

6.5 Advanced Settings - Technicians Only

NOTE:
To access to this area is for fully qualified and accredited technicians only.
Please follow 6.4 to enter password to access this menu.

Select Advanced Settings from the Main Menu to access the following options:

1. Inverter Qty. Set 2. Backflow Power 3. Set CT Ratio 4. FailSafe ON/OFF
5. Backflow Work Mode 6. PELD ON/OFF 7. Transmit ON/OFF 8. System Updade
9. Reset Password 10. Restore settings 11.Set Capacity

6.5.1 Inverter Qty. Set

This submenu is used for setting inverter number.

```
YES=<ENT>  NO=<ESC>
Total Inverter Num:09
```

Figure 6.12 Inverter Qty. Set

Enter the screen ,it shows all the number of inverters which conected to the EPM.
The number(01~99) can be select by pressing the UP/ DOWN keys.
Press the ENTER key to set the inverter number ESC key to return to the previous menu.

6.5.2 Backflow Power

This submenu is used for setting allowed power that inverter can generate to grid.

```
YES=<ENT>  NO=<ESC>
Set Power: +000000W
```

Figure 6.13 Set Backflow Power

Press the UP/DOWN keys to set data.Press the ENTER key to set backflow power
Then press UP/DOWN keys to change the number(the times of 100).
Press the ESC key to save the settings and return to the previous menu.

6.5.3 Set CT Ratio

This is used to set the CT ratio for the current transformer.
Setting range is from 20:1 to 9900:1 with 10:1 interval.
For example, if 1000:5A current transformer is used, please set the ratio as 200:1

YES=<ENT> NO=<ESC>
Set Para:0030:1

Figure 6.14 Set Meter CT

Press the UP/DOWN keys to set data. Press the ENTER key to set CT Para.
Press the ESC key to save the settings and return to the previous menu.

6.5.4 FailSafe ON/OFF

The submenu is used for setting fail Safe ON/OFF.
Fail Safe indicates the communication status between EPM and inverters.
The default setting is "Run". DON'T change it without technicians.

YES=<ENT> NO=<ESC>
FailSafe: RUN

Figure 6.15 FailSafe ON/OFF

When the Fail Safe is set as "Run". If some of inverters lost communication with EPM , EPM's LCD screen will display " RS485 fail"; if all inverters lost communication with EPM, then the LCD screen of EPM will display "fail safe". And The inverter stops output power.

When the Fail Safe is set as "Stop", communication lost between EPM and inverters will not affect the output of inverters.

6.5.5 Backflow Work Mode

This submenu is used for set backflow work mode: 01, 02. "01" is the default mode.

YES=<ENT> NO=<ESC>
Mode:01

Figure 6.16 Backflow Work Mode

Mode "01", As shown in the figure 6.17, the average limiting mode, the output power of each phase is the average of the three-phase load power, and it is more than the phase of the lowest power in three phases.

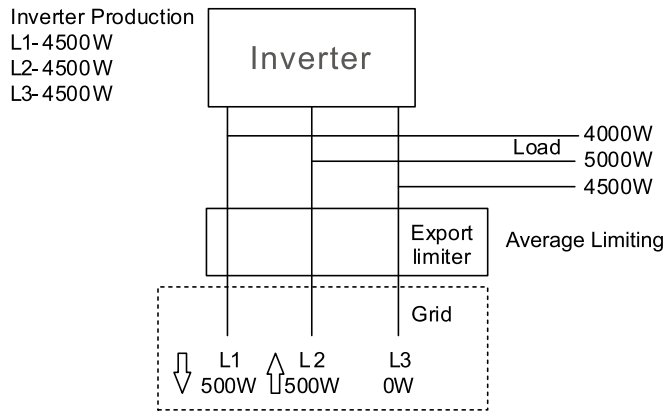

Figure 6.17

Mode "02", As shown in the figure 6.18 the per phase limiting mode, the inverter only generate the power that equals to one of three-phase load power that is the lowest load power of a certain phase.

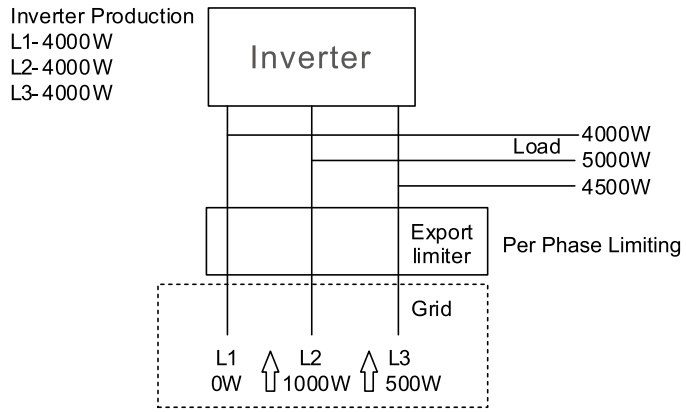

Figure 6.18

6.5.6 PELD ON/OFF

This submenu is used for set PELD on/off. PELD decides EPM works or not.

YES=<ENT> NO=<ESC>
Switch: OFF

Figure 6.19 PELD Switch

Set PELD is on, EPM can monitor and manage the working condition of inverters in real time, and it prevents backflow generated. Set PELD is off, which means EPM shutdowns the function of controlling backflow power.

6.5.7 Transmit ON/OFF

This is a setting for Solis technician use only.
Please keep the switch as OFF for normal use.

YES=<ENT> NO=<ESC>
Switch:OFF

Figure 6.20 Transmit ON/OFF

6.5.8 System Update

The upgrade of EPM's system can realize by external wire.
Please consult our technical engineer for more details.

YES=<ENT> NO=<ESC>
Current Ver.: 11

Figure 6.21 System Update

6. Operation

6.5.9 Reset Password

YES=<ENT> NO=<ESC>
Password: 0000

Figure 6.22 Reset Password

Firstly, input the origin password and press Enter button;
Second, input the new password, press Enter button to save it. UP/DOWN button can be used to move the cursor.
Third, Press ESC button to get to the previous page.

6.5.10 Restore Settings

When Restore Settings is selected, the LCD will display as shown in Figure 6.21.

Are you sure?
YES=<ENT> NO=<ESC>

Figure 6.23 Restore Settings

Press the ENTER key to execute the setting.
Press the ESC key to return to the previous menu.

6.5.11 Set Capacity

This item is used to set the sum of the capacities of the connected inverters.

->Capacity Setting

Figure 6.24

YES=<ENT> NO=<ESC>
Set Capa.: 00000000W

Figure 6.25

6.6 Inverter Set

EPM has two versions: EPM-2G, EPM-5G. While inverter is working with EPM, please be reminded to change the inverters settings as below:

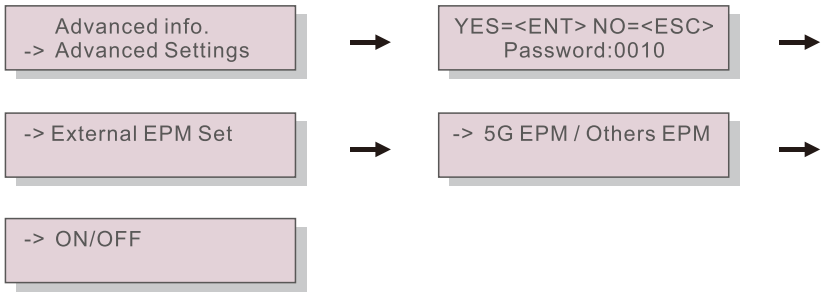

Figure 6.24

NOTE:
If you are using EPM-5G, please choose “5G EPM”, and set it “ON”, if you are using EPM-2G. Please choose “Others EPM”, and set it “ON”, only one setting needs to be set.

NOTE:
If “5G EPM” is chosen, for inverters produced before Nov 30th 2019 (SN: XXXXXX19B30XXXX)need to update the firmware, please contact with Solis local service center or service@ginlong.com for instructions on firmware update.

The EPM is designed in accordance with the most important international safety and EMC requirements. Before delivering to the customer, the EPM has been subjected to several tests to ensure its optimal operation and reliability.

In case of failure, the LCD screen will display alarm message.
The EPM can show Alarm it self or alarm from inverter. There are 3 alarm can be showed on LCD:

1. Backflow

There are backflow current to grid, customer need to stop inverter. and check the connections for the RS485 cable between EPM and inverter.

2. INV. fault

There are fault alarm in inverter, need to check inverter status.

3. Fail safe

RS485 AllFail: EPM has lost communication with ALL inverters
M-ComFailsafe: EPM has lost communication with the Meter inside
CT-Failsafe: Current Sensor failed
M-VFailsafe: One phase voltage of the meter is ZERO
RS485Fail: EPM has lost communication with one or some of the inverters

8. Specifications

Model	Solis-EPM3-5G-PLUS
AC Input	
Rated voltage	400V,3/N/PE
Input voltage range	320V~480V (L to L)
Input frequency range	45~65Hz
Communication	
Inverter communication	Modbus RS485
Communication interface	2pin RS485, RJ45
Maximum communication inverter numbers	80①
Maximum communication distance	1000m
Monitoring	DLB-W (Bulit-in)
General data	
Ambient temperature	-25℃~+60℃
Relative Humidity	5%~95%
Ingress protection	IP65
Self power consumption	＜15W
Dimensions(W*H*D)	488mm*446mm*149mm
Weight	5.4kg
AC connection	Quick connection terminal
Display	LCD，2*20Z
CT conection	Plug terminal
CT specification	Optional（5A）②
Features	
Failsafe fuction	Yes
Remote upgrated	Yes
Control time	5s
Power Accuracy	3%
Warranty	2 years

①: The AC capacity of EPM system should not exceed 2MW.

②: Due to different on-site installation conditions, Solis currently has optional specifications as shown in the above table. It is suggested that the client can choose the appropriate CT specifications according to the actual installation requirements.

9. Appendix

Connection via Ethernet

1. Connect router and data logger via Ethernet port with network cable.
2. Reset the data logger.

Reset : Press the reset button with a needle or open paper clip and hold for a while when the 4 LEDs should be on. Reset is successful when 3 LEDs, except POWER, turn off.

3. Enter the configuration interface of your router, and check the IP address of the data logger assigned by the router. Open a web browser and enter the assigned IP address to get access to the configuration interface of the data logger.

Fill in username and password, both of which are admin as default.

NOTE:
Supported browsers: Internet Explorer 8+, Google Chrome 15+, Firefox 10+.

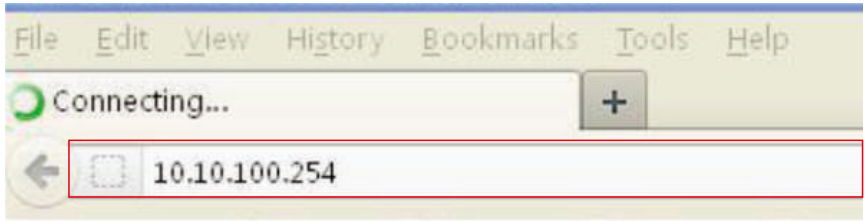

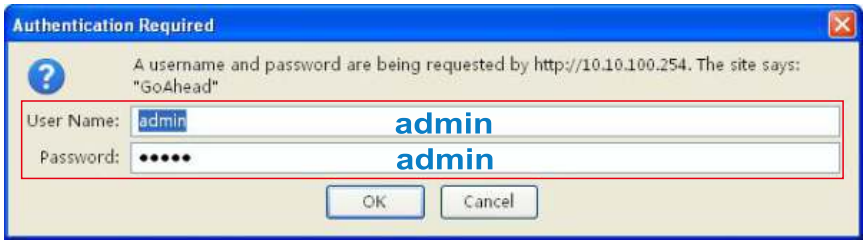

4. Set parameters of data logger.

In the configuration interface of data logger, you can view general information of the device.

Follow the setup wizard to start quick setting.

Step1: Click “Wizard” to start.

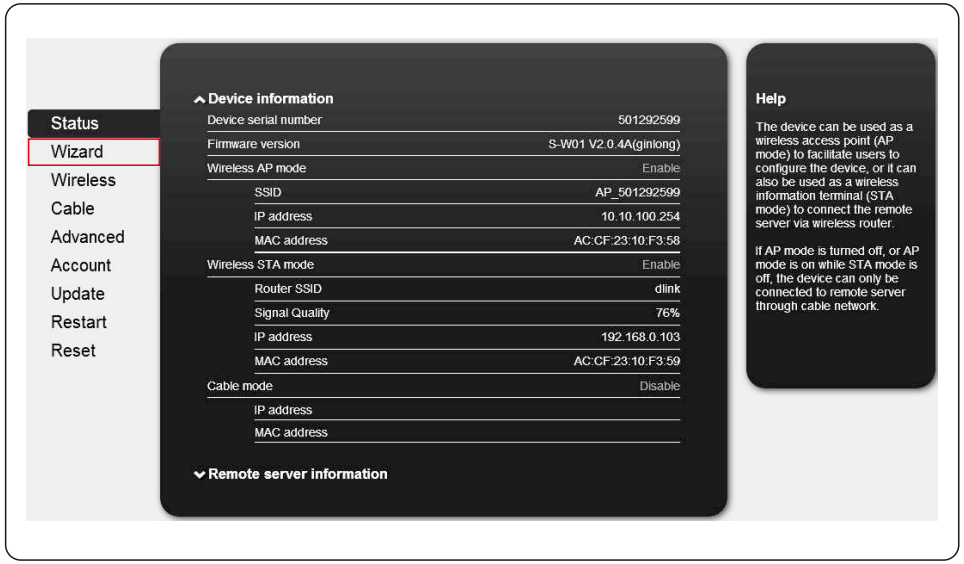

Step2: Click “Start” to continue.

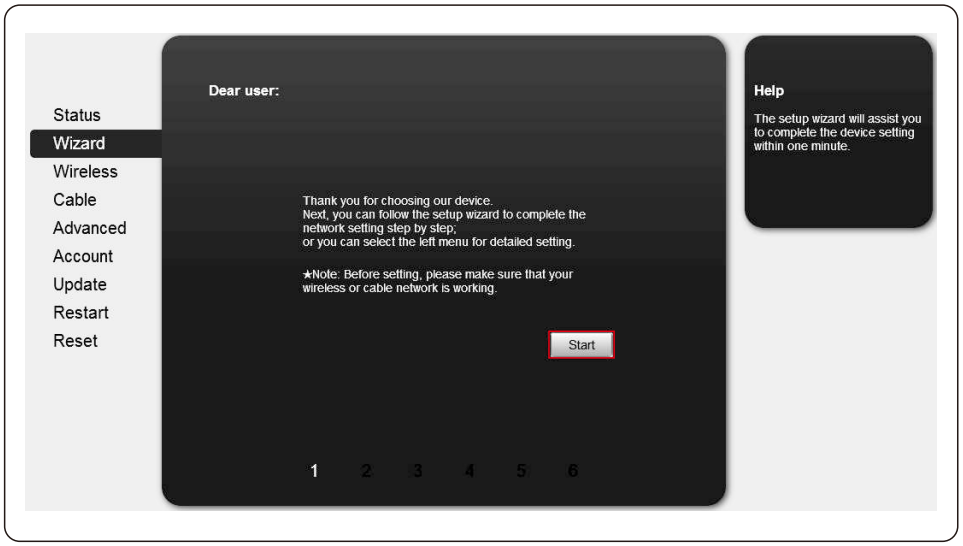

Step3: Select “Cable Connection”, and you can choose to enable or disable the wireless function, then Click “Next”.

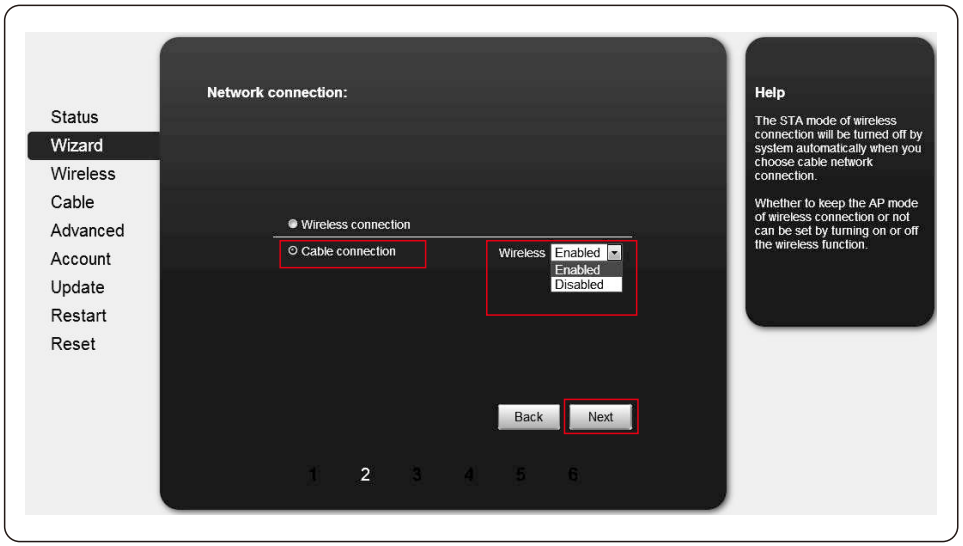

Step4: Select “Enable” to obtain an IP address automatically, then click “Next”.

Step5: If setting is successful, the following page will display. Click “OK" to restart.

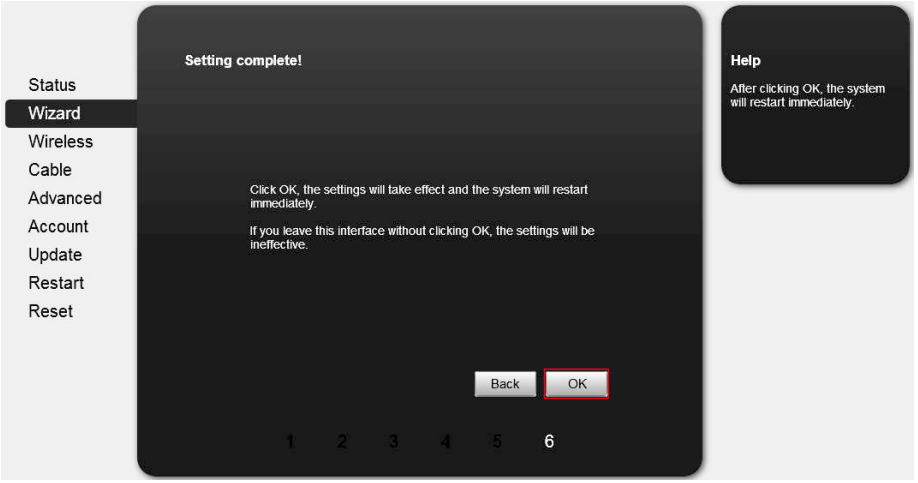

9. Appendix

Step6: If restart is successful, the following page will display.

NOTE:

After setting is completed, if STATUS is permanently on after about 30 seconds, and the 4 LEDs are all on after 2-5minutes, the connection is successful.
If STATUS is flashing, which means unsuccessful connection, please repeat the setting from step 3.